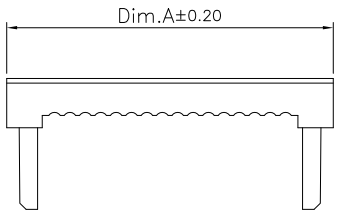

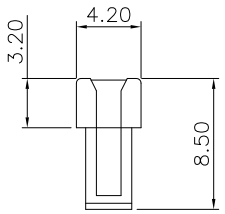

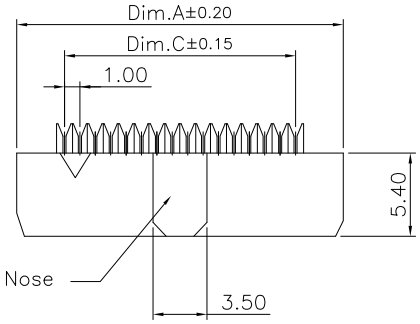

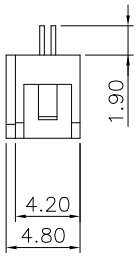

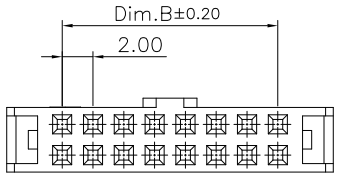

Specifications:
Current rating:1.0A AC,DC
Voltage rating:250V AC, DC
Contact tesistance:20m ohm Max
Insulation resistance:1,000M ohm Min
Withstanding voltage:500V AC/minute
Operating Temperature:−40°C ~ +105°C

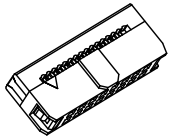

Material:
Insulator: PBT (UL94V−0)
Color:Black
Contact:Copper Alloy
Plating:Selective Gold Plated

How To Order
B D 102−XXX−XX

- Blank: with polarized bump
  N:No polarized bump
- Blank:Black; B:Blue; G:Gray
- 1:Gold Plated On Contact Area, Nickel Plated On IDC Area.
  6:Gold Plated On Contact Area, D Matte Tin Plated On IDC Area. (STD)
  7:Gold Plated 15u" On Contact Area, E Matte Tin Plated On IDC Area.
- No. Of Contacts

CIRCUITS	DIM.A	DIM.B	DIM.C	CIRCUITS	DIM.A	DIM.B	DIM.C
C 06	11.20	4.00	5.00	34	39.20	32.00	33.00
08	13.20	6.00	7.00	36	41.20	34.00	35.00
10	15.20	8.00	9.00	38	43.20	36.00	37.00
12	17.20	10.00	11.00	40	45.20	38.00	39.00
14	19.20	12.00	13.00	44	49.20	42.00	43.00
16	21.20	14.00	15.00	48	53.20	46.00	47.00
18	23.20	16.00	17.00	50	55.20	48.00	49.00
20	25.20	18.00	19.00	54	59.20	52.00	53.00
22	27.20	20.00	21.00	56	61.20	54.00	55.00
24	29.20	22.00	23.00	60	65.20	58.00	59.00
26	31.20	24.00	25.00	62	67.20	60.00	61.00
28	33.20	26.00	27.00	64	69.20	62.00	63.00
30	35.20	28.00	29.00	68	73.20	66.00	67.00
32	37.20	30.00	31.00				

RoHS Compliant

REV	DATE	FILE	BY
F			
E	03−FEB−2025	Add Plated Options	CHIKO
D	07−NOV−2023	Add Plated Options	LUCY
C	10−AUG−2023	Add 6P&8P Dim.	LUCY
B	01−DEC−2020	Modify Part No	MEI
A	17−APR−2020		JERRY

DRAWN: MEI
CHECKED: JERRY
APPROVAL: RORY

GENERAL TOLERANCE:
.X=±0.20
.XX=±0.15

UNIT: MM
SCALE: 1:1
SHEET: 1/1
PROJECTION:

ON−SHORE TECHNOLOGY, INC.

DESCRIPTION: 2.0mm IDC Socket Without Strain Relief

PART NO: 102 B D

SIZE